PHOS 65 LT – SPECIFICATIONS

item: ..... PHOS 65 LT
body: ..... steel / aluminium
weight: ..... 2.9 kg
environmental conditions: ..... 3-phase lighting tracks, dry indoor environments only
ambient temperature: ..... -30° C – + 35° C
cooling: ..... active cooling, fan
noise level: ..... 21 dBA
light source: ..... 60 W High Power LED
recommended projection distance in normal room light: ..... 20 ft
recommended projection distance in darkness: ..... 50 ft
average lifetime of the LED (L70): ..... 35,000 hours
colour temperature: ..... 6,300 - 6,700 K
luminous flux of the LED: ..... 3,800 lumens
gobo size / image size: ..... Ø 50 mm / Ø 40 mm
input voltage: ..... 220 - 240 V AC, 50 / 60 Hz
power consumption: ..... 62 W
efficiency: ..... 0.8 cos. φ
electrical protection: I
ingress protection rating: ..... IP 20
photobiological safety according to ICE62471:2006 EN62471:2008: RG-2
item number: ..... 20065210 – white, 20065220 – black, 20065230 – silver

PHOS 65 LT is the most powerful projector for 3-circuit lighting tracks and its 60 watts High-Power LED provides uncompromised brightness, which guarantees a brilliant and crisp projection in almost any situation. PHOS 65 LT is the optimal solution, when the ambient light is brighter, when projecting on coloured or dark surfaces or when colourful artworks are to be displayed. The device is equipped with a noise-optimized fan which dissipates the heat of the heat sink. PHOS 65 LT is designed for flexible use in track lighting systems. The maximum projection distance is 20 feet in normal room lighting and 50 feet in darkness. Recommended locations include: museums, trade fairs, shopping malls or large lobbies. The projection motif (gobo) can be changed without tools.

Components:

Standard series with high power LED and 85 mm standard lens. The machine is ready to plug in and run. Required accessories: glass gobo with individually designed motif.

CE IP 20 20°

We reserve the right to make technical and optical modifications. Our general terms and conditions apply.

Dimensions

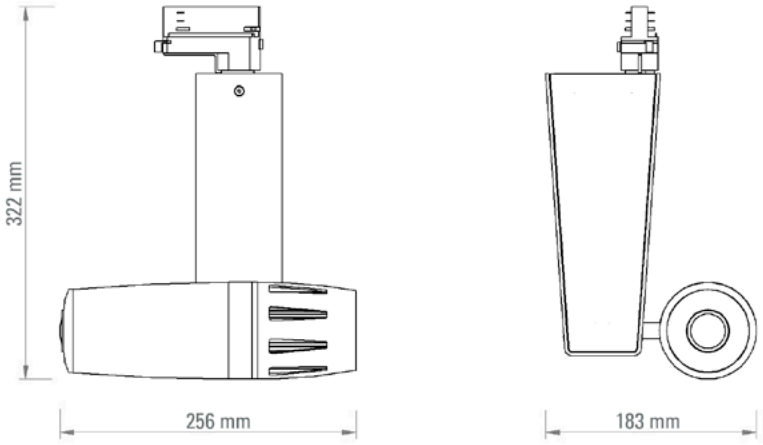

Projection Size

Standard Lens, f = 85 mm

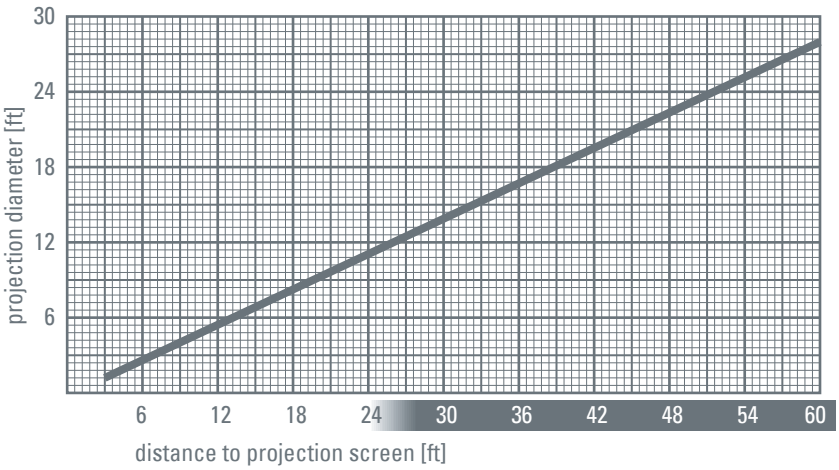

Derksen Lichttechnik GmbH
Sauerlandstraße 5
45889 Gelsenkirchen
Germany

Tel.: +49 (0)209 / 9 80 70 0
Fax: +49 (0)209 / 9 80 70 60

info@derksen.de
www.derksen.de

We reserve the right to make technical and optical modifications. Our general terms and conditions apply.